RP1170/1195

17"/19" 1280x1024 LCD Monitor
1U Rackmount Drawer
Optional for touch screen & DVI

Industrial Monitors

User Manual

All rights reserved. Product description and product specifications are subject to change without notice.
For lastest product information, please visit Acnodes' website at www.acnodes.com

ACNODES

14628 Central Ave. Chino, CA91710 Tel: 909.597.7588 Fax: 909.597.1939
© Copyright 2015 Acnodes Corp.

Legal Information

First English printing, October 2002

Information in this document has been carefully checked for accuracy; however, no guarantee is given to the correctness of the contents. The information in this document is subject to change without notice. We are not liable for any injury or loss that results from the use of this equipment.

Safety Instructions

Please read all of these instructions carefully before you use the device. Save this manual for future reference.

¦ Unplug equipment before cleaning. Don't use liquid or spray detergent; use a moist cloth.
¦ Keep equipment away from excessive humidity and heat. Preferably, keep it in an air-conditioned environment with temperatures not exceeding 40º Celsius (104º Fahrenheit).
¦ When installing, place the equipment on a sturdy, level surface to prevent it from accidentally falling and causing damage to other equipment or injury to persons nearby.
¦ When the equipment is in an open position, do not cover, block or in any way obstruct the gap between it and the power supply. Proper air convection is necessary to keep it from overheating.
¦ Arrange the equipment's power cord in such a way that others won't trip or fall over it.
¦ If you are using a power cord that didn't ship with the equipment, ensure that it is rated for the voltage and current labeled on the equipment's electrical ratings label. The voltage rating on the cord should be higher than the one listed on the equipment's ratings label.
¦ Observe all precautions and warnings attached to the equipment.
¦ If you don't intend on using the equipment for a long time, disconnect it from the power outlet to prevent being damaged by transient over-voltage.
¦ Keep all liquids away from the equipment to minimize the risk of accidental spillage. Liquid spilled on to the power supply or on other hardware may cause damage, fire or electrical shock.
¦ Only qualified service personnel should open the chassis. Opening it yourself could damage the equipment and invalidate its warranty.
¦ If any part of the equipment becomes damaged or stops functioning, have it checked by qualified service personnel.

What the warranty does not cover

¦ Any product, on which the serial number has been defaced, modified or removed.
¦ Damage, deterioration or malfunction resulting from:
  ? Accident, misuse, neglect, fire, water, lightning, or other acts of nature, unauthorized product modification, or failure to follow instructions supplied with the product.
  ? Repair or attempted repair by anyone not authorized by us.
  ? Any damage of the product due to shipment.
  ? Removal or installation of the product.
  ? Causes external to the product, such as electric power fluctuation or failure.
  ? Use of supplies or parts not meeting our specifications.
  ? Normal wear and tear.
  ? Any other causes which does not relate to a product defect.
¦ Removal, installation, and set-up service charges.

Regulatory Notices Federal Communications Commission (FCC)

This equipment has been tested and found to comply with the limits for a Class B digital device, pursuant to Part 15 of the FCC rules. These limits are designed to provide reasonable protection against harmful interference in a residential installation.

Any changes or modifications made to this equipment may void the user's authority to operate this equipment. This equipment generates, uses, and can radiate radio frequency energy and, if not installed and used in accordance with the instructions, may cause harmful interference to radio communications.

However, there is no guarantee that interference will not occur in a particular installation. If this equipment does cause harmful interference to radio or television reception, which can be determined by turning the equipment off and on, the user is encouraged to try to correct the interference by one or more of the following measures:

¦ Re-position or relocate the receiving antenna.
¦ Increase the separation between the equipment and receiver.
¦ Connect the equipment into an outlet on a circuit different from that to which the receiver is connected.

Contents

< Part. 1 > RP1170 / RP1195

1.1	Package Content	P.1
1.2	Structure Diagram & Dimension	P.1 - 2
1.3	Installation	P.3

< Part. 2 > Specifications / OSD

2.1	Product Specifications	P.4 - 5
2.2	On-screen Display Operation (OSD)	P.6 - 7

< Part. 3 > Options

3.1	HDMI, S-Video + BNC & Audio	P.8
3.2	17” / 19” Touchscreen : Resistive, Capacitive	P.9
3.3	48V, 24V or 12VDC power	P.10

Before Installation

- It is very important to mount the equipment in a suitable cabinet or on a stable surface.
- Make sure the place has a good ventilation, is out of direct sunlight, away from sources of excessive dust, dirt, heat, water, moisture and vibration.

Unpacking

The equipment comes with the standard parts shown in package content. Check and make sure they are included and in good condition. If anything is missing, or damaged, contact the supplier immediately.

How To Clean Your LCD Monitor

Caution :

- To avoid the risk of electric shock, make sure your hands are dry before unplugging your monitor from or plugging your monitor into an electrical outlet.
- When you clean your monitor, do not press down on the LCD screen. Pressing down on the screen can scratch or damage your display. Pressure damage is not covered under warranty.
- Use only cleansers made specifically for cleaning monitors and monitor screens. Cleansers not made to clean monitors and monitor screens can scratch the LCD display or strip off the finish.
- Do not spray any kind of liquid directly onto the screen or case of your monitor. Spraying liquids directly onto the screen or case can cause damage which is not covered under warranty.
- Do not use paper towels or abrasive pads to clean your monitor. Using an abrasive pad or any wood based paper product such as paper towels can scratch your LCD screen.

Cleaning Your Monitor

To clean your LCD safely, please follow these steps :

1. Disconnect the power cord.
2. Gently wipe the surface using a clean, dry microfiber cloth. Use as little pressure as possible.

Cleaning Tough Marks and Smudges

To remove tough marks and smudges, please follow these steps :

1. Disconnect the power cord.
2. Spray a small amount of non-abrasive cleanser on a microfiber cloth.

Caution : Do not spray or apply any liquids directly onto the monitor. Always apply the solution to your microfiber cloth first, not directly on the parts you are cleaning.

3. Gently wipe the surface. Use as little pressure as possible.
4. Wait until your monitor is completely dry before plugging it in and powering it up.

< Part 1 >

< 1.1 > Package Content

RP1170 or RP1195 unit X 1

- 6ft VGA cable X 1
- Power cord X 1
- M6 screw, cage nut & cup washer X 8

The above package content is only for the pure model (VGA and DVI-D only). It varies with options such as HDMI, AV, audio, touchscreen & DC power.

< 1.2 > Structure Diagram

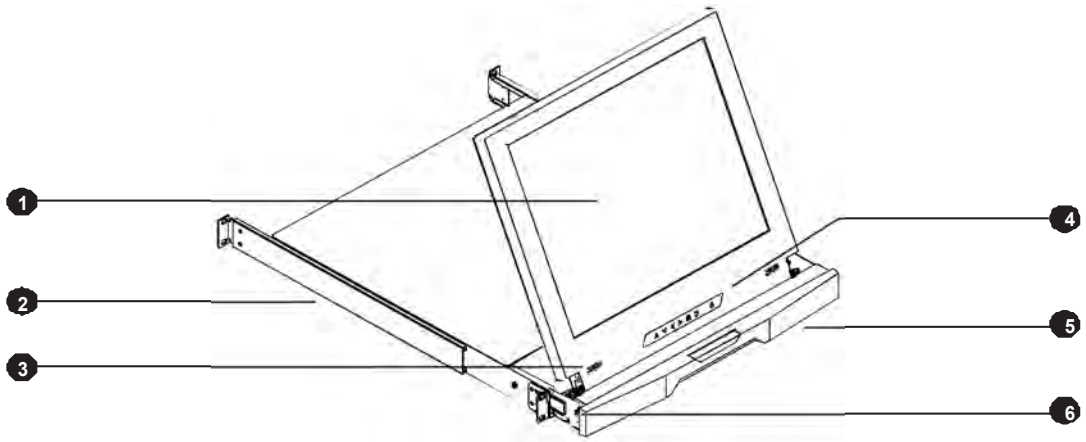

① LCD panel

② Installation Slide

③ Audio speaker (for HDMI or Audio option)

④ LCD OSD membrane

⑤ Carry handle to release the 2-pt lock

⑥ 2-point lock

< 1.2 > Dimension

Front View

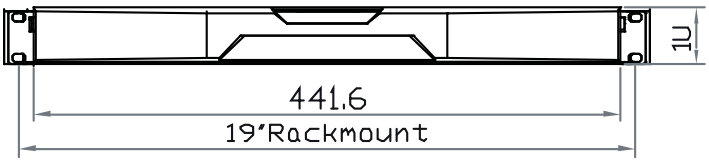

Side View

UNIT : mm
1mm = 0.03937 inch

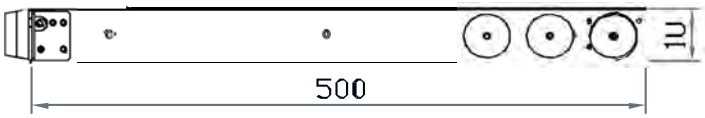

Top View

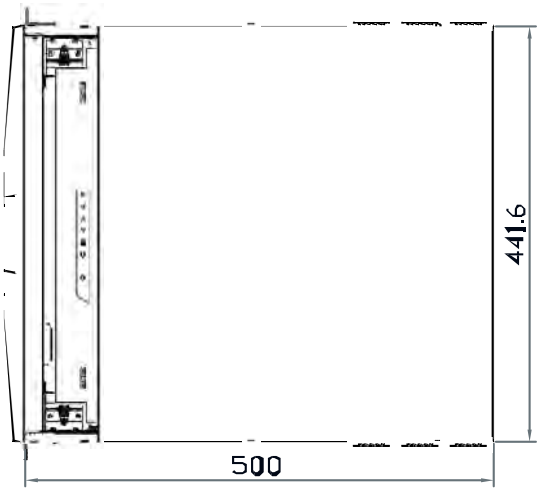

Model	Product Dimension (W x D x H)	Packing Dimension (W x D x H)	Net Weight	Gross Weight
RP1170 series	441.6 x 500 x 44 mm 17.4 x 18.1 x 1.73"	590 x 687 x 120 mm 23.2 x 27 x 4.7”	10.5 kg 23 lb	16.5 kg 36 lb
RP1195 series	441.6 x 500 x 44 mm 17.4 x 19.7 x 1.73"	590 x 687 x 120 mm 23.2 x 27 x 4.7”	12.5 kg 28 lb	18.5 kg 41 lb

The weight is only for the pure models. It varies with accessories & options such as HDMI, AV, audio, touchscreen & DC power.

< 1.3 > Installation - How to install Installation Slides

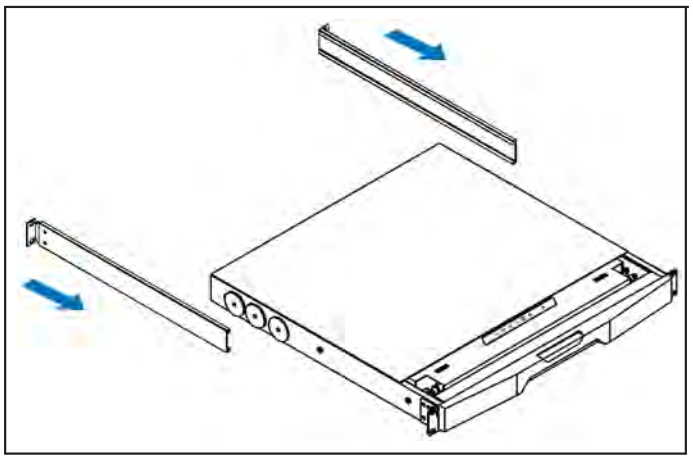

Step 1

Insert the left and right rear mounting brackets into the display drawer.

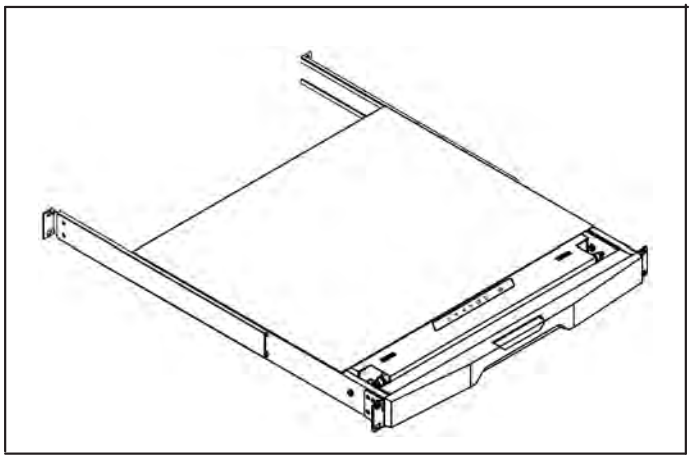

Step 2

Measure the depth of the front and rear mounting rails.

Align each rear mounting bracket to a suitable length.

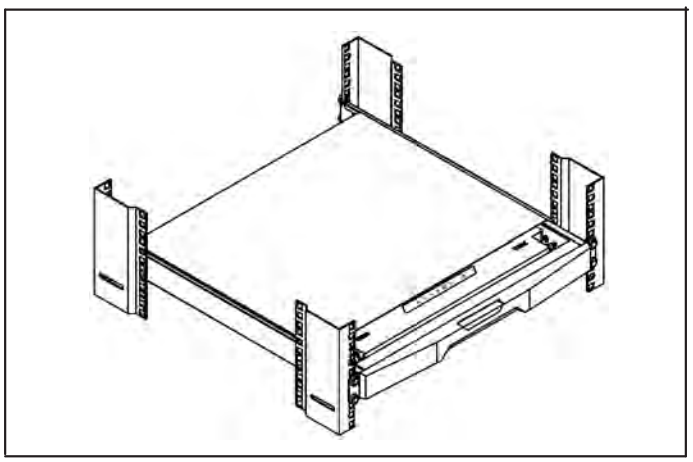

Step 3

Complete the installation

Fix the display drawer into the rack.

M6 screw, cage nut & cup washer x 8 are provided.

< Part 2 >

< 2.1 > Product Specifications

LCD Panel		RP1170	RP1195
	Manufacturer	SAMSUNG	
	Panel Size (diagonal)	17-inch TFT color LCD	19-inch TFT color LCD
	Display pixel (dots x lines)	1280 x 1024	1280 x 1024
	Brightness (typ.)	250	250
	Contrast Ratio (typ.)	1000:1	1000:1
	Color	16.7 M	16.7 M
	Viewing Angle (L/R/U/D)	80/80/80/80	80/80/80/80
	Response Time (ms)	5	5
	Dot pitch (mm)	0.264	0.294
	Display Area (mm)	337.92H x 270.33V	376.32H x 301.05V
	Surface treatment	Haze 25%, Hard-coating	
	Surface hardness	3H	3H
	Backlight Type	CCFL	CCFL
	MTBF (hrs)	50,000	50,000

Video Connectivity			
	Digital	HDMI	HDMI 1.1, CEA-861-D
		DVI	DVI-D, TMDS single link
	Analog	VGA	Analog 0.7Vp-p
		Composite (BNC)	NTSC & PAL
		S-Video (4-pin)	NTSC & PAL
	Plug & Play	DVI / VGA	VESA EDID structure 1.3
	Synchronization	VGA	Separate, Composite & SOG

Audio Connectivity			
	Audio Input	Connector	3.5mm stereo jack
		Impedance / Power level	30kΩ / 750mV
	Audio Output	Connector	3.5mm stereo jack
		Resistance / Power level	30kΩ / 2.8V
	Speaker Output	Power	2 x 2W

*When the audio output is connected, speaker output is OFF

Regulatory	Safety Approval	FCC & CE

Power	Power Supply	Range	Auto-sensing 100 to 240VAC, 50 / 60Hz
	Power Consumption	Screen display ON	25W or less
		Power saving mode	4W or less
		Power button OFF	1W or less

Environmental Conditions	Operating	Temperature	0 to 50°C degree
		Humidity	20~90%, non-condensing
	Storage	Temperature	-5 to 60°C degree
		Humidity	5~90%, non-condensing
		Shock	10G acceleration (11ms duration)
		Vibration	5~500Hz 1G RMS random

		RP1170	**RP1195**
Physical Specification	Product (W x D x H)	441.6 x 500 x 44 mm 17.4 x 19.7 x 1.73 inch	441.6 x 500 x 44 mm 17.4 x 19.7 x 1.73 inch
	Packing (W x D x H)	590 x 687 x 120 mm 23.2 x 27 x 4.7 inch	590 x 687 x 120 mm 23.2 x 27 x 4.7 inch
	Net Weight	10.5 kgs / 23 lbs	12.5 kgs / 28 lbs
	Gross Weight	16.5 kgs / 36 lbs	18.5 kgs / 41 lbs

Applicable Format	DVI-D / VGA Input	PC Signal	1280 x 1024 x 60 / 75Hz
			1280 x 960 x 60Hz
			1280 x 760 x 60 / 75Hz
			1152 x 864 x 75Hz
			1024 x 768 x 60 / 70 / 75Hz
			848 x 480 x 60Hz
			800 x 600 x 60 / 72 / 75Hz
			720 x 400 x 70Hz
			640 x 480 x 60 / 72 / 75Hz
			640 x 400 x 70Hz
			640 x 350 x 70Hz

< 2.3 > On-screen Display Operation (OSD)

Membrane Switch	Function
⏻	Turn the monitor on or off
☰	Display the OSD menu Act as an Enter key to select screen setting options
∧ ∨ < >	Scroll through menu options and adjust the displayed control
↩	Exit the OSD screen Go back to the previous on-screen sub-menu or main menu

Remark : All LED touch buttons in **WHITE** light.
The LED of **Power** ⏻ touch button will flash continuously when there is no signal input.

① All the LED touch buttons will automatically turn off after 10 minutes of idle status (except the **Power** ⏻).

② Light up all membrane buttons, please press any button for 1 - 2 seconds (except the **Power** ⏻).

< 2.3 > On-screen Display Operation (OSD)

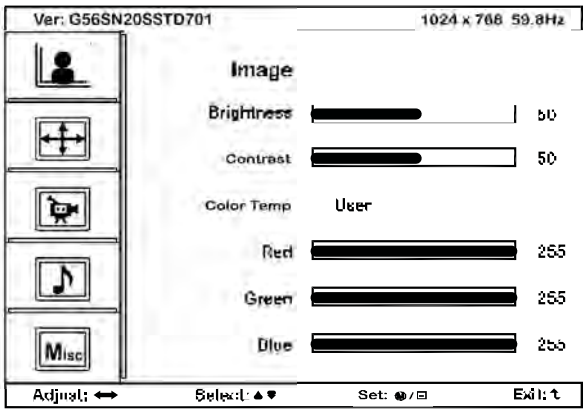

OSD Configuration Page

Image:
for the brightness, contrast, color temp, red, green, and blue

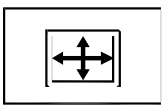

Geometry:
for the auto adjust, H position, V position, phase and clock

Video:
for the colour, tint, sharpness, noise reduction, DCDi and TV Setup

Audio:
for volume, bass, treble, balance, AVL and mute

Misc:
for the language, OSD position, graphic mode, ratio, reset and timer

< Part 3 >

< 3.1 > Options :

- HDMI (HDMI 1.1, CEA-861-D)

- AV (S-Video + Composite, BNC)

- Audio (3.5mm audio jacks for audio in & out, and 2W + 2W speakers)

(1) For AV2.2 upgrade, either HDMI or DVI-D is provided.

(2) For the above options, casing depth will be extended from 500mm (19.7") to 570mm (22.4")

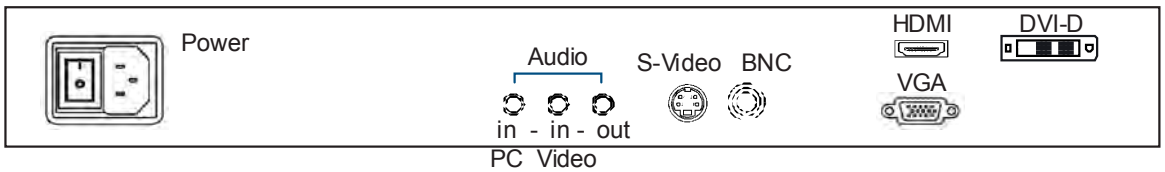

< 3.2 > Options : Touchscreen & driver

17” / 19" USB Touchscreen Specification

Model	17’	19”	17”	19”
	TRB e-Resistive		**TCB** e-Capacitive	
Technology	5-Wire Resistive		Capacitive	
Touch Point	Single		Single	
Method	Stylus or Finger		Finger	
Activation Force	= 50g / Stylus=R0.8		= 50g	
Durability	35 million touches		300 million touches	
Response Time	15 ms		20 ms	
Optical Transmittance	80% ± 3%		93% ±2%	
Surface Hardness	3H		9H	
Haze	8% ± 3%		7%	
Glass	1.4 ±0.2 mm	3.2 ±0.2 mm	2.8 mm ±10%	2.8 mm ±10%
Connector	USB Type A		USB Type A	
Compatibility	Windows 7 / XP / Vista, Linux		Windows 7 / XP / Vista, Linux	

USB touchscreen package includes 1 x 6ft USB cable, quick reference guideline and CD disc
For detailed information, please refer to the attached CD disc
As the touchscreen unit is not made of toughened glass, please handle it carefully

USB Touchscreen

***

For touchscreen option, casing depth will be extended from 500mm (19.7") to 570mm (22.4")

Please follow the below steps to setup the touch screen:-

Step 1. Run the bundled CD disc

Step 2. Double click the Setup.exe

Step 3. Follow the installation instruction to finish the setup

Step 4. After installation, run the TouchKit program & the “4 point calibration”

Please do the initial calibration after the first setup

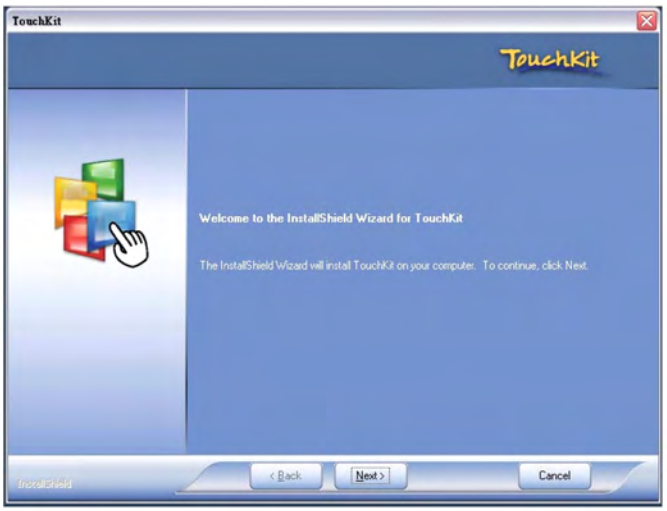

< 3.3 > Options : DC Power

Model	12V	24V	48V
Input rating			
Input voltage:	12-Volt	24-Volt	48-Volt
Input range:	9 ~ 18V	18 ~ 36V	36 ~ 75V
Input current			
- No load	50 mA	50 mA	50 mA
- Full load	4950 mA	2450 mA	1220 mA
Output rating			
Output voltage:	12-Volt	12-Volt	12-Volt
Output current:	4.16A	4.16A	4.16A
Efficiency	84%	85%	85%

DC power

***** For DC power option :**

(1) Option excludes 1 x power cord and 1 x AC power adapter.

(2) Casing depth will be extended from 500mm (19.7") to 570mm (22.4")