RP 1170

17" 1280x1024 LCD Monitor
1U Rackmount Drawer
Optional for touch screen & DVI

Industrial Monitors

Installation Guide

All rights reserved. Product description and product specifications are subject to change without notice.
For lastest product information, please visit Acnodes' website at www.acnodes.com

ACNODES

14628 Central Ave. Chino, CA91710 Tel: 909.597.7588 Fax: 909.597.1939
© Copyright 2015 Acnodes Corp.

Index

Chapter 1 Getting Started

1.1 Diagram.....1

1.2 How to install “One-Man” installation slides into rack...2

1.3 How to install “One Man” installation slides.....3

1.4 How to use rails.....4

1.1 **Diagram**

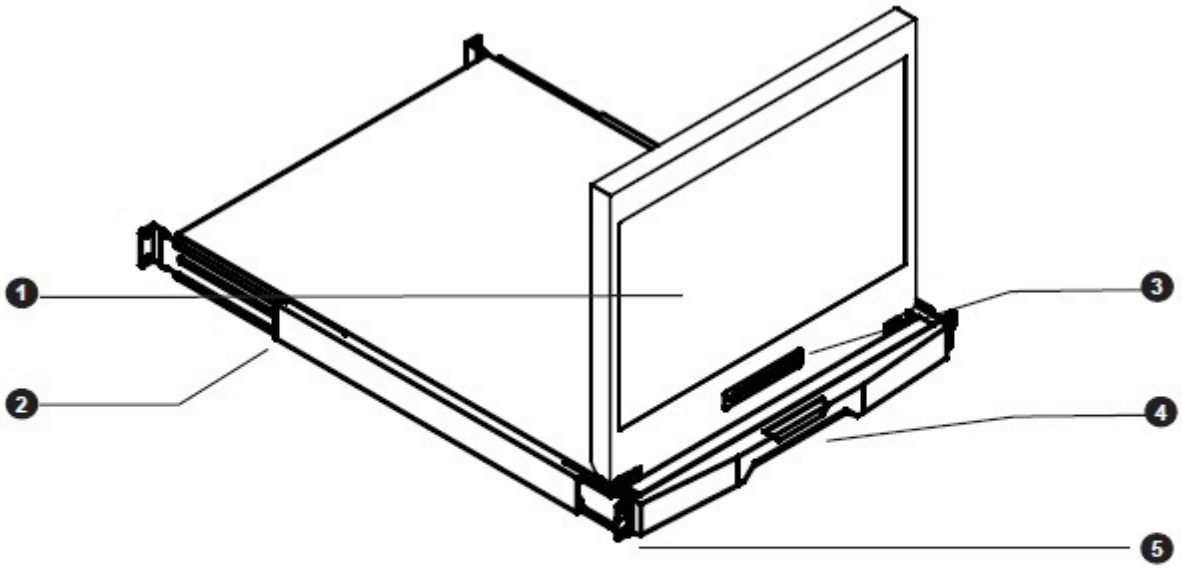

① LCD interchangeable module kit

② "One Man" Installation Slide

③ LCD membrane

④ Carry handle to release the 2-pt lock

⑤ 2-point lock

1.2 How to Install "One Man" Installation Slides into rack

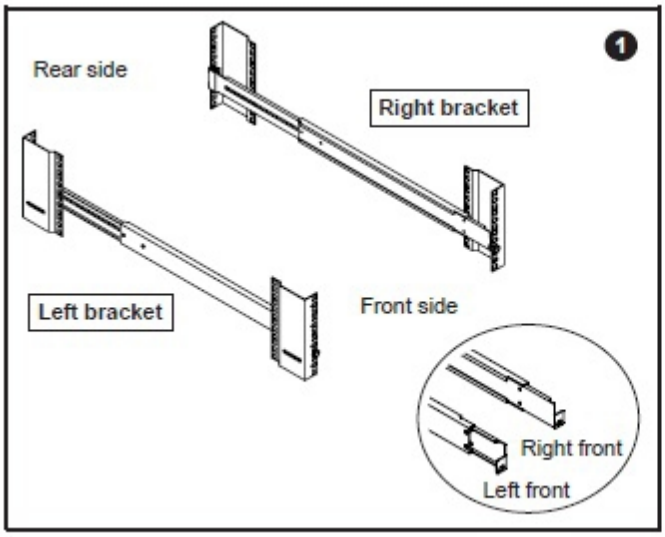

- Attach the left and right mounting bracket to rack 19" mounting rails.
- Adjust the rear mouting bracket to fit your rack.
- M6 screw and cup washer x 6 pcs included.

Caution : Leaving the screws slightly loose, until you complete the installation in step 4

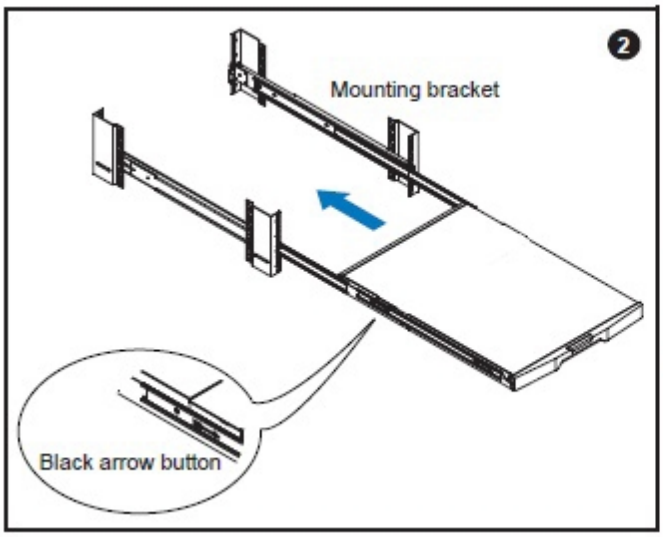

- Pick up the LCD drawer.
- Insert the LCD drawer into the mounting bracket.
- Pull and hold the left & right black arrow buttons on the rails.
- Return the LCD drawer to park position.

1.3 How to Install “One Man” Installation Slides

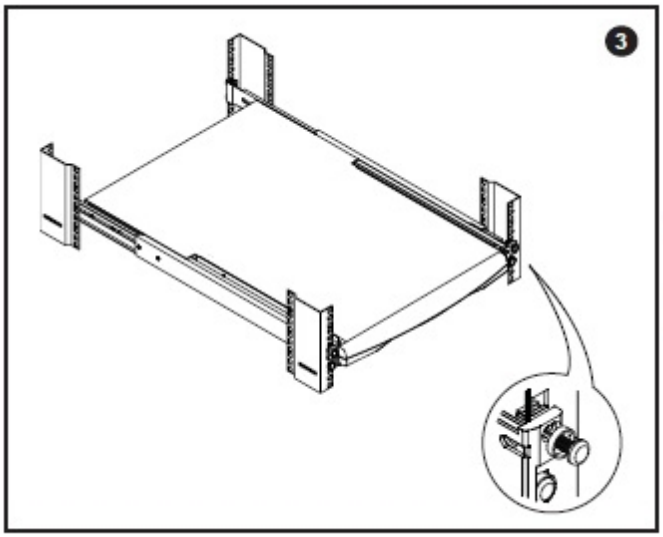

- Attach front left and right mounting ears of the LCD drawer to vertical mounting rails.
- M6 screw and cup washer x 2 pcs included.

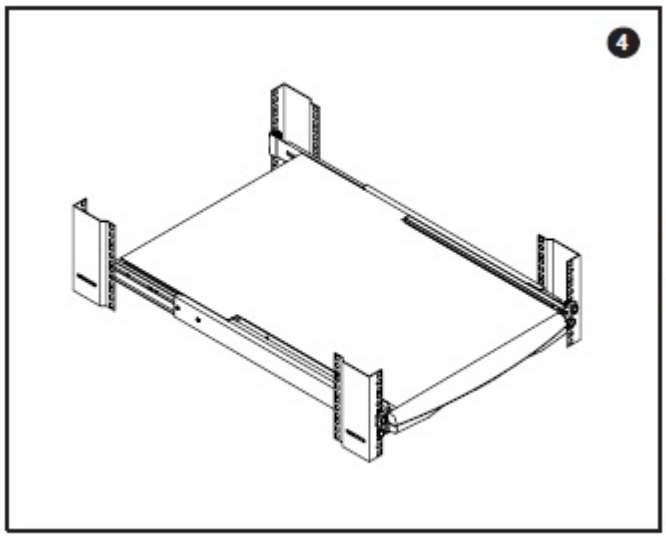

Complete the installation

- Tighten all 8 pcs of M6 screw to complete the installation.

1.4 How to Use the Slides

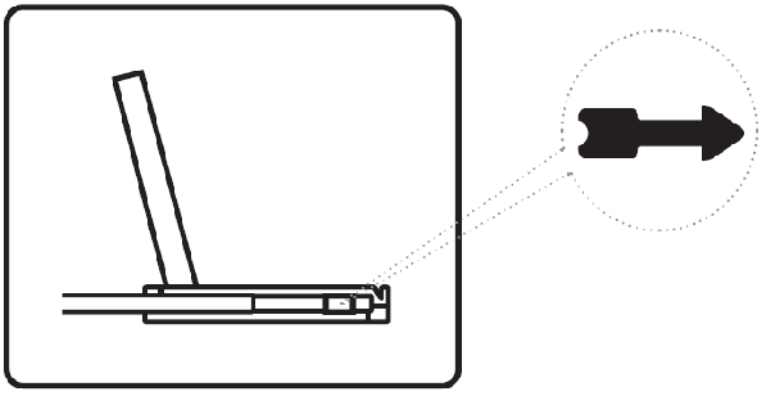

Figure 1.

? A black arrow release button is located on the outside of each slide. (shown in Figure 1).

Figure 2.

Pull and hold the black arrow button on either side of the LCD keyboard drawer to unlock. (shown in Figure 2).

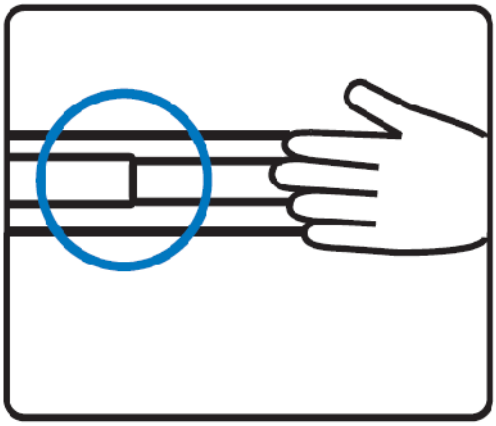

Figure 3.

? Push the LCD keyboard drawer into the rack. (shown in Figure 3).

Caution : Keep your fingers away from the slide stop