# User Manual

*MKD91712/91912*: 1U Rackmount 17/19" Monitor Keyboard Drawer

14628 Central Ave,
Chino, CA 91710
tel:909.597.7588, fax:909.597.1939

© Copyright 2013 Acnodes, Inc.
All rights reserved. Product description and product specifications are subject to change without notice. For latest product information, please visit Acnodes' web site at www.acnodes.com.

# MKD91712/91912

## 1U Rackmount LCD Keyboard Drawer

**Legal Information**

First English printing, October 2002

Information in this document has been carefully checked for accuracy; however, no guarantee is given to the correctness of the contents. The information in this document is subject to change without notice. We are not liable for any injury or loss that results from the use of this equipment.

**Safety Instructions**

**Please read all of these instructions carefully before you use the device. Save this manual for future reference.**

- Unplug equipment before cleaning. Don't use liquid or spray detergent; use a moist cloth.
- Keep equipment away from excessive humidity and heat. Preferably, keep it in an air-conditioned environment with temperatures not exceeding 40º Celsius (104º Fahrenheit).
- When installing, place the equipment on a sturdy, level surface to prevent it from accidentally falling and causing damage to other equipment or injury to persons nearby.
- When the equipment is in an open position, do not cover, block or in any way obstruct the gap between it and the power supply. Proper air convection is necessary to keep it from overheating.
- Arrange the equipment's power cord in such a way that others won't trip or fall over it.
- If you are using a power cord that didn't ship with the equipment, ensure that it is rated for the voltage and current labeled on the equipment's electrical ratings label. The voltage rating on the cord should be higher than the one listed on the equipment's ratings label.
- Observe all precautions and warnings attached to the equipment.
- If you don't intend on using the equipment for a long time, disconnect it from the power outlet to prevent being damaged by transient over-voltage.
- Keep all liquids away from the equipment to minimize the risk of accidental spillage. Liquid spilled on to the power supply or on other hardware may cause damage, fire or electrical shock.
- Only qualified service personnel should open the chassis. Opening it yourself could damage the equipment and invalidate its warranty.
- If any part of the equipment becomes damaged or stops functioning, have it checked by qualified service personnel.

**What the warranty does not cover**

- Any product, on which the serial number has been defaced, modified or removed.
- Damage, deterioration or malfunction resulting from:
  - Accident, misuse, neglect, fire, water, lightning, or other acts of nature, unauthorized product modification, or failure to follow instructions supplied with the product.
  - Repair or attempted repair by anyone not authorized by us.
  - Any damage of the product due to shipment.
  - Removal or installation of the product.
  - Causes external to the product, such as electric power fluctuation or failure.
  - Use of supplies or parts not meeting our specifications.
  - Normal wear and tear.
  - Any other causes which does not relate to a product defect.
- Removal, installation, and set-up service charges.

**Regulatory Notices Federal Communications Commission (FCC)**

This equipment has been tested and found to comply with the limits for a Class B digital device, pursuant to Part 15 of the FCC rules. These limits are designed to provide reasonable protection against harmful interference in a residential installation.

Any changes or modifications made to this equipment may void the user's authority to operate this equipment. This equipment generates, uses, and can radiate radio frequency energy and, if not installed and used in accordance with the instructions, may cause harmful interference to radio communications.

However, there is no guarantee that interference will not occur in a particular installation. If this equipment does cause harmful interference to radio or television reception, which can be determined by turning the equipment off and on, the user is encouraged to try to correct the interference by one or more of the following measures:

- Re-position or relocate the receiving antenna.
- Increase the separation between the equipment and receiver.
- Connect the equipment into an outlet on a circuit different from that to which the receiver is connected.

ACNODES
14628 Central Ave,
Chino, CA 91710
tel:909.597.7588, fax:909.597.1939

© Copyright 2013 Acnodes, Inc.
All rights reserved. Product description and product specifications are subject to change without notice. For latest product information, please visit Acnodes' web site at www.acnodes.com.

# Contents

## < Part. 1 > MKD91712/91912


| | | |
|---|---|---|
| 1.1 | Package Content | P.1 |
| 1.2 | Structure Diagram & Dimension | P.1 - 2 |
| 1.3 | Installation | P.3 |


## < Part. 2 > Specifications / OSD


| | | |
|---|---|---|
| 2.1 | Product Specifications | P.4 - 5 |
| 2.2 | Keyboard / Mouse Specifications | P.6 |
| 2.3 | On-screen Display Operation ( OSD ) | P.7 - 8 |


## < Part. 3 > Options


| | | |
|---|---|---|
| 3.1 | Audio | P.9 |
| 3.2 | 48V, 24V or 12VDC power | P.10 |


## < Part. 4 > KVM Integration


| | | |
|---|---|---|
| 4.1 | KVM port connection | P.11 |
| 4.2 | Specifications | P.12 |
| 4.3 | KVM Button | P.13 |
| 4.4 | KVM Hotkey | P.14 |
| 4.5 | DC power 12V, 24V, 48V Input | P.15 |


ACNODES
14628 Central Ave,
Chino, CA 91710
tel:909.597.7588, fax:909.597.1939

© Copyright 2013 Acnodes, Inc.
All rights reserved. Product description and product specifications are subject to change without notice. For latest product information, please visit Acnodes' web site at www.acnodes.com.

# MKD91712/91912

1U Rackmount LCD Keyboard Drawer

## Before Installation

- It is very important to mount the equipment in a suitable cabinet or on a stable surface.
- Make sure the place has a good ventilation, is out of direct sunlight, away from sources of excessive dust, dirt, heat, water, moisture and vibration.

## Unpacking

The equipment comes with the standard parts shown in package content. Check and make sure they are included and in good condition. If anything is missing, or damaged, contact the supplier immediately.

## How To Clean Your LCD Monitor

### Caution :

- To avoid the risk of electric shock, make sure your hands are dry before unplugging your monitor from or plugging your monitor into an electrical outlet.
- When you clean your monitor, do not press down on the LCD screen. Pressing down on the screen can scratch or damage your display. Pressure damage is not covered under warranty.
- Use only cleansers made specifically for cleaning monitors and monitor screens. Cleansers not made to clean monitors and monitor screens can scratch the LCD display or strip off the finish.
- Do not spray any kind of liquid directly onto the screen or case of your monitor. Spraying liquids directly onto the screen or case can cause damage which is not covered under warranty.
- Do not use paper towels or abrasive pads to clean your monitor. Using an abrasive pad or any wood based paper product such as paper towels can scratch your LCD screen.

## Cleaning Your Monitor

To clean your LCD safely, please follow these steps :

1. Disconnect the power cord.
2. Gently wipe the surface using a clean, dry microfiber cloth. Use as little pressure as possible.

## Cleaning Tough Marks and Smudges

To remove tough marks and smudges, please follow these steps :

1. Disconnect the power cord.
2. Spray a small amount of non-abrasive cleanser on a microfiber cloth.

**Caution : Do not spray or apply any liquids directly onto the monitor. Always apply the solution to your microfiber cloth first, not directly on the parts you are cleaning.**

3. Gently wipe the surface. Use as little pressure as possible.
4. Wait until your monitor is completely dry before plugging it in and powering it up.

ACNODES
14628 Central Ave,
Chino, CA 91710
tel:909.597.7588, fax:909.597.1939

© Copyright 2013 Acnodes, Inc.
All rights reserved. Product description and product specifications are subject to change without notice. For latest product information, please visit Acnodes' web site at www.acnodes.com.

## < Part 1 >

## < 1.1 > Package Content

**MKD91712/91912 unit X 1**

- Wired mini USB optical mouse X 1
- 6ft Combo KVM cable X 1
- Power cord X 1
- M6 screw, cage nut & cup washer X 8

## < 1.2 > Structure Diagram

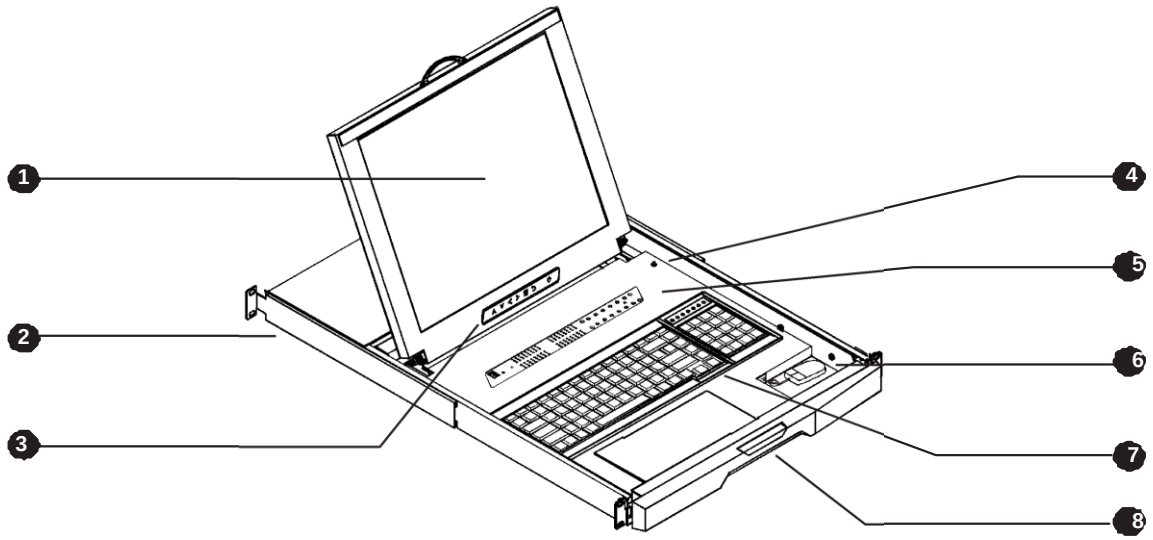


1. LCD interchangeable module kit
2. Installation Slide
3. LCD membrane
4. Microswitch
5. Membrane switch (KVM option)
6. Mini USB optical mouse
7. Keyboard interchangeable module kit
8. Carry handle to release the 2-pt lock

## < 1.2 > Dimension

### Front View

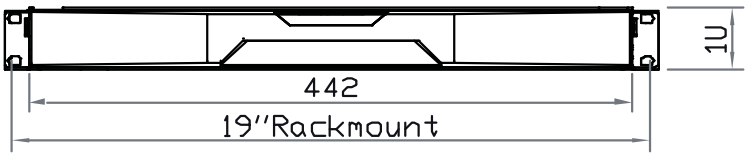


### Side View

UNIT : mm
1mm = 0.03937 inch

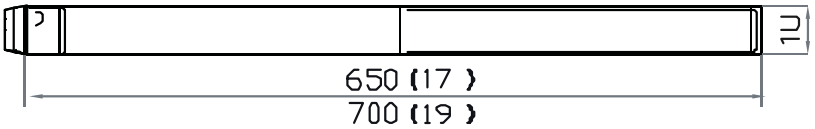


### Top View

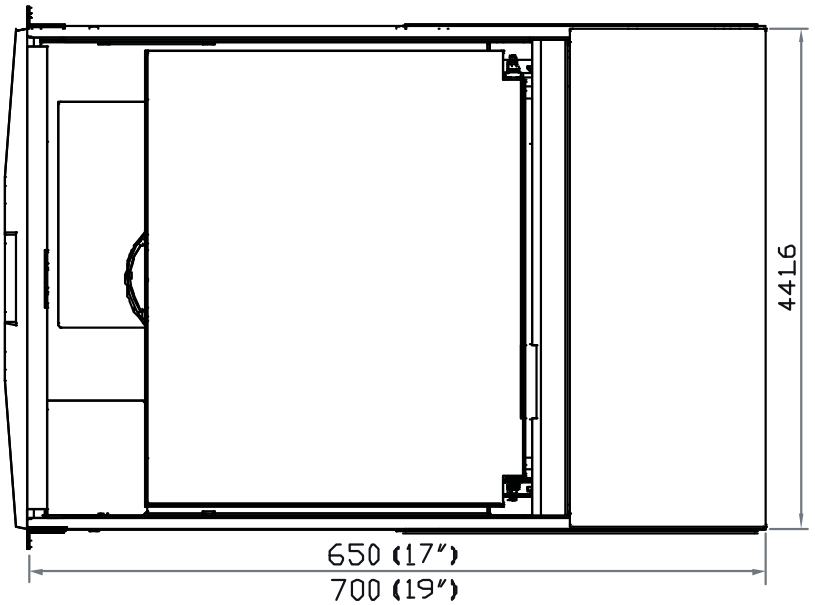


| Model | Product Dimension (W x D x H) | Packing Dimension (W x D x H) | Net Weight | Gross Weight |
|---|---|---|---|---|
| **MKD91712** | 442 x 650 x 44 mm<br>17.4 x 25.6 x 1.73" | 595 x 860 x 140 mm<br>23.4 x 33.9 x 5.5” | 15.5 kg<br>34 lb | 21 kg<br>46 lb |
| **MKD91912** | 442 x 700 x 44 mm<br>17.4 x 27.6 x 1.73" | 595 x 910 x 140 mm<br>23.4 x 35.8 x 5.5” | 16.5 kg<br>36 lb | 22 kg<br>48 lb |

## < 1.3 > Installation - How to install Installation Slides

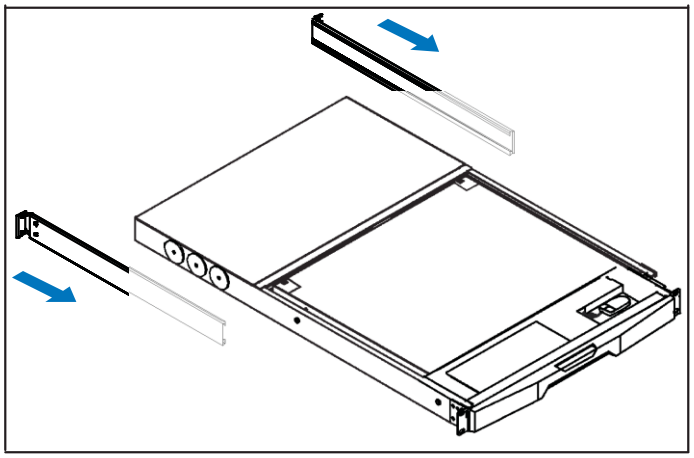

**Step 1**

Insert the left and right rear mounting brackets into the LCD console drawer.

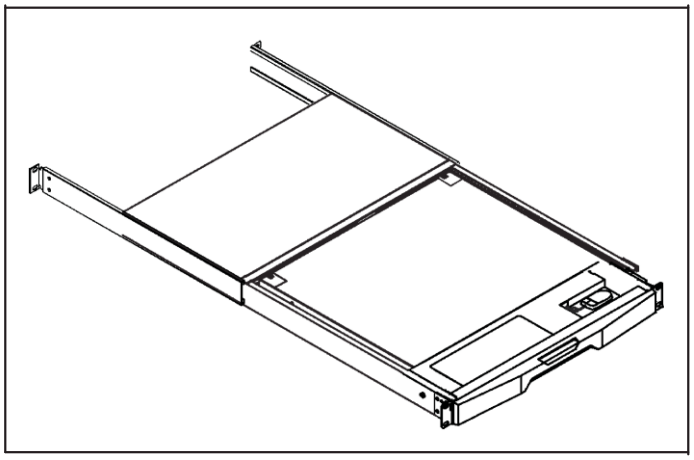

**Step 2**

Measure the depth of the front and rear mounting rails.

Align each rear mounting bracket to a suitable length.

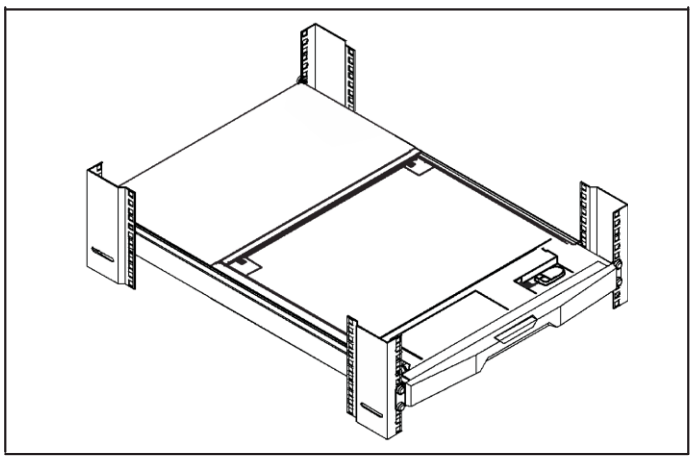

**Step 3**

**Complete the installation**

Fix the LCD console drawer into the rack.

**M6 screw, cage nut & cup washer x 8 are provided.**

# MKD91712/91912

1U Rackmount LCD Keyboard Drawer

## < Part 2 >

## < 2.1 > Product Specifications

| LCD Panel | | MKD91712 | MKD91912 |
|---|---|---|---|
| | Manufacturer | SAMSUNG | |
| | Panel Size ( diagonal ) | 17-inch TFT color LCD | 19-inch TFT color LCD |
| | Display pixel ( dots x lines ) | 1280 x 1024 | 1280 x 1024 |
| | Brightness ( typ. ) | 250 | 250 |
| | Contrast Ratio ( typ. ) | 1000:1 | 1000:1 |
| | Color | 16.7 M | 16.7 M |
| | Viewing Angle ( L/R/U/D ) | 80/80/80/80 | 80/80/80/80 |
| | Response Time ( ms ) | 5 | 5 |
| | Dot pitch ( mm ) | 0.264 | 0.294 |
| | Display Area ( mm ) | 337.92H x 270.33V | 376.32H x 301.05V |
| | Surface treatment | Haze 25%, Hard-coating | |
| | Surface hardness | 3H | 3H |
| | Backlight Type | CCFL | CCFL |
| | MTBF ( hrs ) | 50,000 | 50,000 |

| Video Connectivity | Digital | DVI | DVI-D, TMDS single link |
|---|---|---|---|

| Regulatory | Safety Approval | FCC & CE |
|---|---|---|

| Power | Power Supply | Range | Auto-sensing 100 to 240VAC, 50 / 60Hz |
|---|---|---|---|
| | Power Consumption | Screen display ON | 25W or less |
| | | Power saving mode | 4W or less |
| | | Power button OFF | 1W or less |

ACNODES
14628 Central Ave,
Chino, CA 91710
tel:909.597.7588, fax:909.597.1939

© Copyright 2013 Acnodes, Inc.
All rights reserved. Product description and product specifications are subject to change without notice. For latest product information, please visit Acnodes' web site at www.acnodes.com.

# MKD91712/91912

## 1U Rackmount LCD Keyboard Drawer

| | | | |
|---|---|---|---|
| **Environmental Conditions** | Operating | Temperature | 0 to 50°C degree |
| | | Humidity | 20~90%, non-condensing |
| | Storage | Temperature | -5 to 60°C degree |
| | | Humidity | 5~90%, non-condensing |
| | | Shock | 10G acceleration (11ms duration) |
| | | Vibration | 5~500Hz 1G RMS random |

| | | | |
|---|---|---|---|
| **Physical Specification** | | **MKD91712** | **MKD91912** |
| | Product ( W x D x H ) | 442 x 650 x 44 mm<br>17.4 x 25.6 x 1.73 inch | 442 x 700 x 44 mm<br>17.4 x 27.6 x 1.73 inch |
| | Packing ( W x D x H ) | 595 x 860 x 140 mm<br>23.4 x 33.9 x 5.5 inch | 595 x 910 x 140 mm<br>23.4 x 35.8 x 5.5 inch |
| | Net Weight | 15.5 kgs / 34 lbs | 16.5 kgs / 36 lbs |
| | Gross Weight | 21 kgs / 44 lbs | 22kgs / 44\8 lbs |

| | | | |
|---|---|---|---|
| **Applicable Format** | VGA Input | PC Signal | 1280 x 1024 x 60 / 75Hz |
| | | | 1280 x 960 x 60Hz |
| | | | 1280 x 760 x 60 / 75Hz |
| | | | 1152 x 864 x 75Hz |
| | | | 1024 x 768 x 60 / 70 / 75Hz |
| | | | 848 x 480 x 60Hz |
| | | | 800 x 600 x 60 / 72 / 75Hz |
| | | | 720 x 400 x 70Hz |
| | | | 640 x 480 x 60 / 72 / 75Hz |
| | | | 640 x 400 x 70Hz |
| | | | 640 x 350 x 70Hz |

ACNODES
14628 Central Ave,
Chino, CA 91710
tel:909.597.7588, fax:909.597.1939

© Copyright 2013 Acnodes, Inc.
All rights reserved. Product description and product specifications are subject to change without notice. For latest product information, please visit Acnodes' web site at www.acnodes.com.

## < 2.2 > Keyboard / Mouse Specifications

**G** G keyboard

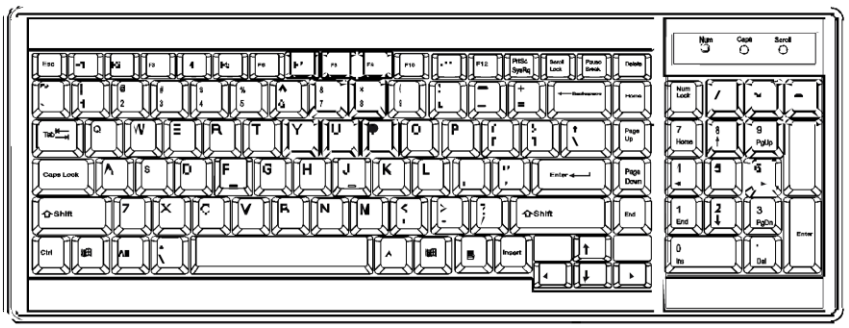

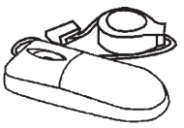

**WOM-01**
Wired mini USB optical mouse

**option:**

**WOM-02**
Wireless USB optical mouse

| | |
|---|---|
| **Key force** | 55 ± 5g |
| **Travelling distance** | 3 ± 0.3mm |
| **Switch life** | > 10 million life cycle time |
| **Software support** | MS Windows 7 / 2008 / 2003 / 2000 / XP / ME / 98 / DOC<br>Linux / Mac |

### Supporting layouts

| | | | | | |
|---|---|---|---|---|---|
| **America** | United States | | | | |
| **EMEA** | United Kingdom | Germany | France | Spain | Norway |
| | Italy | Russia | Switzerland | Netherlands | Portugal |
| **Asia** | China | Japan | Korea | Arabia | Turkey |

## < 2.3 > On-screen Display Operation ( OSD )

| Membrane Switch | Function |
|---|---|
| ⏻ | Turn the monitor on or off |
| ☰ | Display the OSD menu<br>Act as an Enter key to select screen setting options |
| ∧ ∨ < > | Scroll through menu options and adjust the displayed control |
| ↩ | Exit the OSD screen<br>Go back to the previous on-screen sub-menu or main menu |

Remark : All LED touch buttons in **WHITE** light.
The LED of **Power** ⏻ touch button will flash continuously when there is no signal input.

① All the LED touch buttons will automatically turn off after 10 minutes of idle status ( except the **Power** ⏻ ).

② Light up all membrane buttons, please press any button for 1 - 2 seconds ( except the **Power** ⏻ ).

ACNODES
14628 Central Ave,
Chino, CA 91710
tel:909.597.7588, fax:909.597.1939

© Copyright 2013 Acnodes, Inc.
All rights reserved. Product description and product specifications are subject to change without notice. For latest product information, please visit Acnodes' web site at www.acnodes.com.

## < 2.3 > On-screen Display Operation ( OSD )

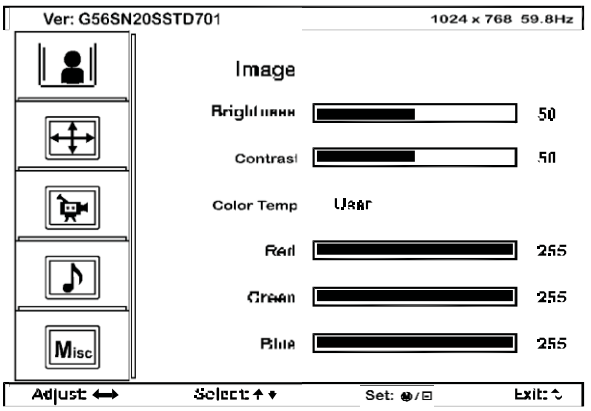


### OSD Configuration Page

**Image:**
for the brightness, contrast, color temp, red, green, and blue

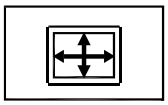

**Geometry:**
for the auto adjust, H position, V position, phase and clock

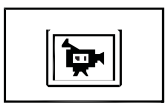

**Video:**
for the colour, tint, sharpness, noise reduction, DCDi and TV Setup

**Audio:**
for volume, bass, treble, balance, AVL and mute

**Misc:**
for the language, OSD position, graphic mode, ratio, reset and timer

ACNODES
14628 Central Ave,
Chino, CA 91710
tel:909.597.7588, fax:909.597.1939

© Copyright 2013 Acnodes, Inc.
All rights reserved. Product description and product specifications are subject to change without notice. For latest product information, please visit Acnodes' web site at www.acnodes.com.

## < Part 3 >

## < 3.1 > Options :

**- Audio** ( 3.5mm audio jacks for audio in & out, and 2W + 2W speakers )

ACNODES
14628 Central Ave,
Chino, CA 91710
tel:909.597.7588, fax:909.597.1939

© Copyright 2013 Acnodes, Inc.
All rights reserved. Product description and product specifications are subject to change without notice. For latest product information, please visit Acnodes' web site at www.acnodes.com.

## < 3.2 > Options : DC Power

| Model | 12V | 24V | 48V |
|---|---|---|---|
| **Input rating** | | | |
| Input voltage: | 12-Volt | 24-Volt | 48-Volt |
| Input range: | 9 ~ 18V | 18 ~ 36V | 36 ~ 75V |
| Input current | | | |
| - No load | 50 mA | 50 mA | 50 mA |
| - Full load | 4950 mA | 2450 mA | 1220 mA |
| **Output rating** | | | |
| Output voltage: | 12-Volt | 12-Volt | 12-Volt |
| Output current: | 4.16A | 4.16A | 4.16A |
| **Efficiency** | 84% | 85% | 85% |

## DC power

***
**Option excludes 1 x power cord and 1 x AC power adapter**

ACNODES
14628 Central Ave,
Chino, CA 91710
tel:909.597.7588, fax:909.597.1939

© Copyright 2013 Acnodes, Inc.
All rights reserved. Product description and product specifications are subject to change without notice. For latest product information, please visit Acnodes' web site at www.acnodes.com.

## <Part 4> KVM Integration

## < 4.1 > KVM port connection

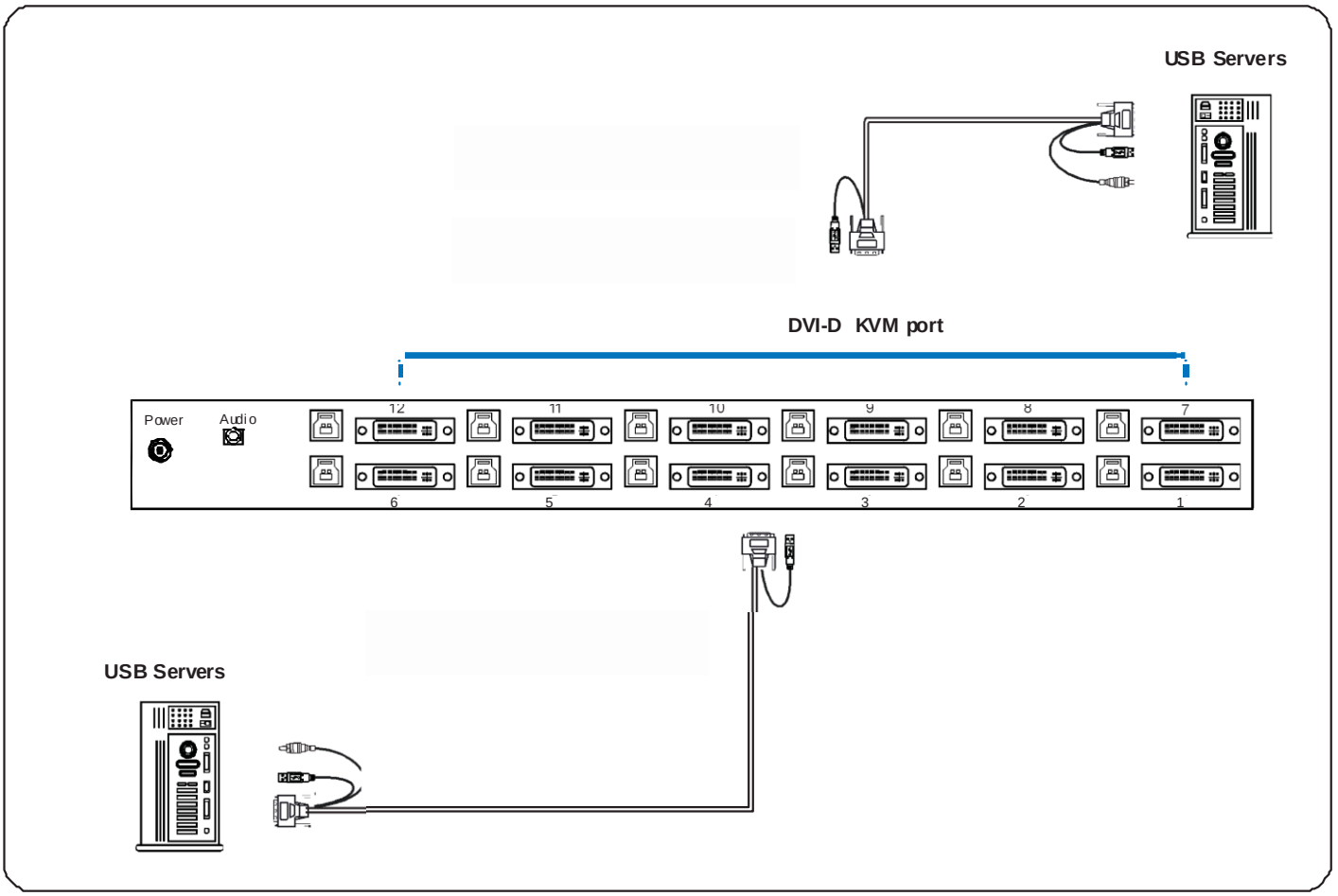


### DVI KVM Cable

6 feet DVI KVM cable
15 feet DVI KVM cable
( Server end : DVI-D + USB + Audio )
( KVM port : DVI-D + USB3.0 )

IP console, remote console, daisy-chain and OSD menu are NOT available for this model.

ACNODES
14628 Central Ave,
Chino, CA 91710
tel:909.597.7588, fax:909.597.1939

© Copyright 2013 Acnodes, Inc.
All rights reserved. Product description and product specifications are subject to change without notice. For latest product information, please visit Acnodes' web site at www.acnodes.com.

## < 4.2 > Specifications

| KVD1201 | |
|---|---|
| – **KVM Port** | |
| Number of ports: | 12 |
| Connector: | DVI-D connector |
| | USB 3.0 connector ( combined for keyboard, mouse & audio ) |
| Connectivity: | Combo 4-in-1, KVM cable, 6 or 15 feet |
| – **Audio Out** | 1 x 3.5mm stereo audio |
| – **Management** | |
| PC Selection: | Front button & keyboard hotkey |
| – **Compatibility** | |
| Multi-platform: | Mix PCs, SUN and Mac G3 / G4 Mac / iMac |
| Support: | Windows 7 / Vista / 2003 / XP, Linux, Unix |
| – **Power** | |
| Input: | 100 or 240V AC at 50 or 60 Hz via IEC type cord |
| Option DC: | 12V / 24V / 48V DC input |
| Consumption: | Max. 48 Watt, Standby 5 Watt |
| – **Regulatory Approval:** | FCC, CE |
| – **Environmental** | |
| Operating: | 0 to 50°C |
| Storage: | -5 to 60°C |
| Relative humidity: | 90%, non-condensing |
| Shock: | 50G peak acceleration (11ms, half-sine wave) |
| Vibration: | 58~100Hz / 0.98G (11ms / cycle) |

ACNODES
14628 Central Ave,
Chino, CA 91710
tel:909.597.7588, fax:909.597.1939

© Copyright 2013 Acnodes, Inc.
All rights reserved. Product description and product specifications are subject to change without notice. For latest product information, please visit Acnodes' web site at www.acnodes.com.

## 4.3 KVM Button

### Power ON

- Turn off all servers and KVM switches
- Make sure all cables / connectors are properly connected
- Recommend Power ON sequence is monitor, KVM switch finally computer

### Front Panel - Port LED Indications

**DVI-D KVM 12 ports**

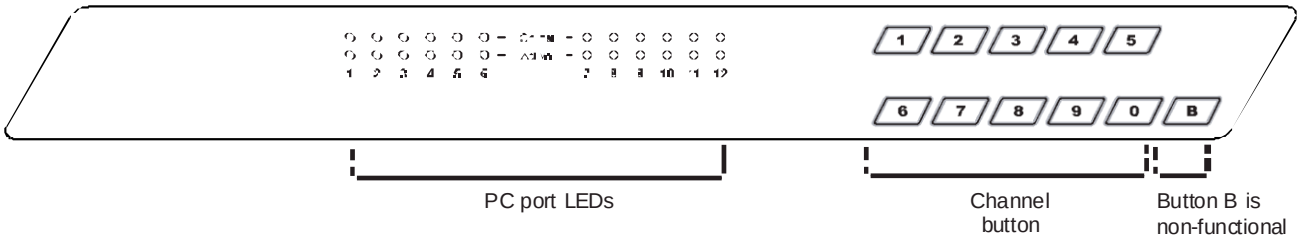


| | |
|---|---|
| PC port LEDs | ***Online*** : **Blue** LED on indicating a PC is connecting to the port<br>***Active*** : **Green** LED on indicating a selected channel |
| Channel button | Press to select channel from 01 to 12 |

ACNODES
14628 Central Ave,
Chino, CA 91710
tel:909.597.7588, fax:909.597.1939

© Copyright 2013 Acnodes, Inc.
All rights reserved. Product description and product specifications are subject to change without notice. For latest product information, please visit Acnodes' web site at www.acnodes.com.

## 4.4 KVM Hotkey

| Hotkey | Function |
|---|---|
| **Scroll Lock** + **Scroll Lock** + ⬆ | Switch to previous port |
| **Scroll Lock** + **Scroll Lock** + ⬇ | Switch to next port |
| **Scroll Lock** + **Scroll Lock** + Port no. | Switch to specific port |
| **Scroll Lock** + **Scroll Lock** + **S** | Auto scan for powered on PC |
| **Scroll Lock** + **Scroll Lock** + **B** | Enable / Disable beeper sound |

**Remarks:**

- Example of "**Scroll Lock** + **Scroll Lock** + Port no."
  - Port No. : 01 to 12
  - e.g. Port 4 : **Scroll Lock** + **Scroll Lock** + **0** + **4**
  - e.g. Port 12 : **Scroll Lock** + **Scroll Lock** + **1** + **2**
- You must press the hotkey within 2 seconds
- A beep sound will be heard for successful entering

**Hotkey Label**

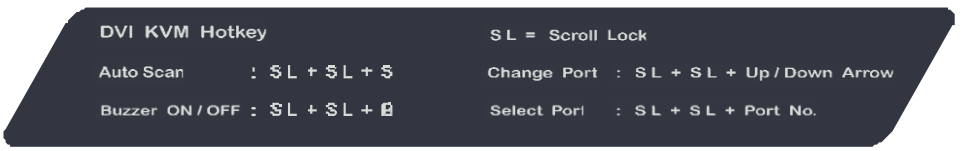


ACNODES
14628 Central Ave,
Chino, CA 91710
tel:909.597.7588, fax:909.597.1939

© Copyright 2013 Acnodes, Inc.
All rights reserved. Product description and product specifications are subject to change without notice. For latest product information, please visit Acnodes' web site at www.acnodes.com.

## 4.5 DC Power 12V, 24V, 48V Input

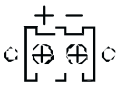
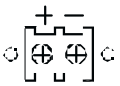

| Model | 12V | 24V | 48V |
|---|---|---|---|
| **Input rating** | | | |
| Input voltage: | 12-Volt | 24-Volt | 48-Volt |
| Input range: | 9 ~ 18V | 18 ~ 36V | 36 ~ 75V |
| Input current | | | |
| - No load | 50 mA | 50 mA | 50 mA |
| - Full load | 4950 mA | 2450 mA | 1220 mA |
| **Output rating** | | | |
| Output voltage: | 12-Volt | 12-Volt | 12-Volt |
| Output current: | 4.16A | 4.16A | 4.16A |
| **Efficiency** | 84% | 85% | 85% |

**Remarks:**

- Package does not include power cord

ACNODES
14628 Central Ave,
Chino, CA 91710
tel:909.597.7588, fax:909.597.1939

© Copyright 2013 Acnodes, Inc.
All rights reserved. Product description and product specifications are subject to change without notice. For latest product information, please visit Acnodes' web site at www.acnodes.com.